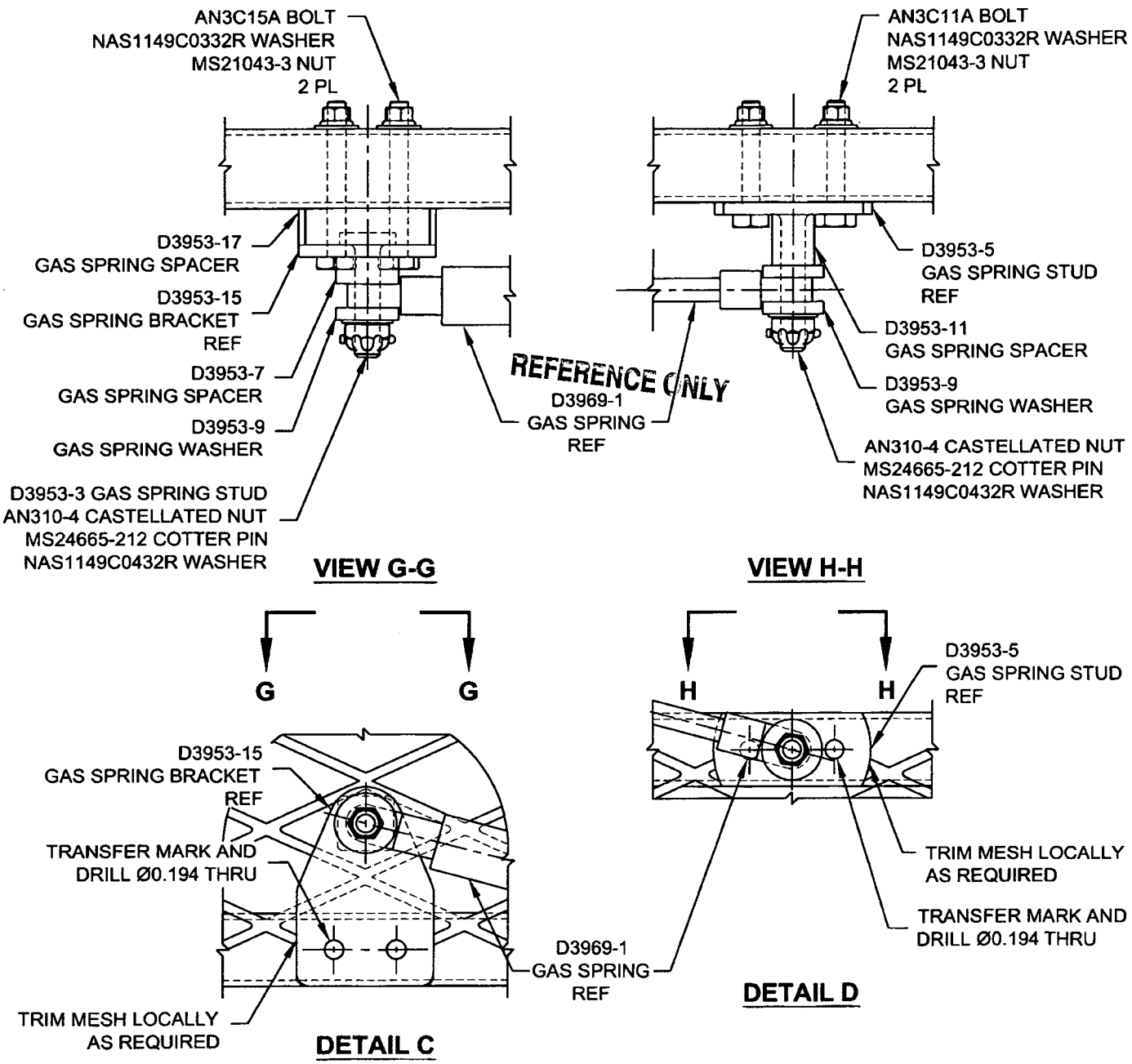

CANADA
DEPARTMENT OF TRANSPORT
AIRCRAFT CERTIFICATION
BRANCH
DAO # 01-O-01

APPROVED

BY: _____
D. SHEPHERD (DE # 02)

DATE: 09.11.11
CERT. NO.: SH94-14
ISSUE NO.: 4

DESIGN	AJS	**DART AEROSPACE LTD** HAWKESBURY, ONTARIO, CANADA
DRAWN	AJS	
CHECKED		DRAWING NO. REV. C
MFG. APPR.	N/A	DSI 9473 SHEET 8 OF 8
APPROVED		TITLE SCALE
DE APPR.		AUTOMATIC LID OPENER INSTL NTS
DATE	09.11.11	

COPYRIGHT © 2009 BY DART AEROSPACE LTD
THIS DOCUMENT IS PRIVATE AND CONFIDENTIAL AND IS SUPPLIED ON THE EXPRESS CONDITION THAT IT IS NOT TO BE USED FOR ANY PURPOSE OR COPIED OR COMMUNICATED TO ANY OTHER PERSON WITHOUT WRITTEN PERMISSION FROM DART AEROSPACE LTD

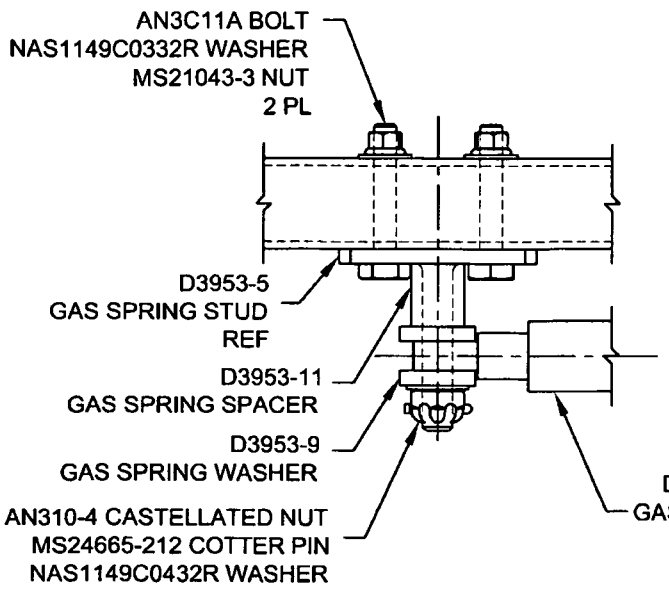

VIEW F-F

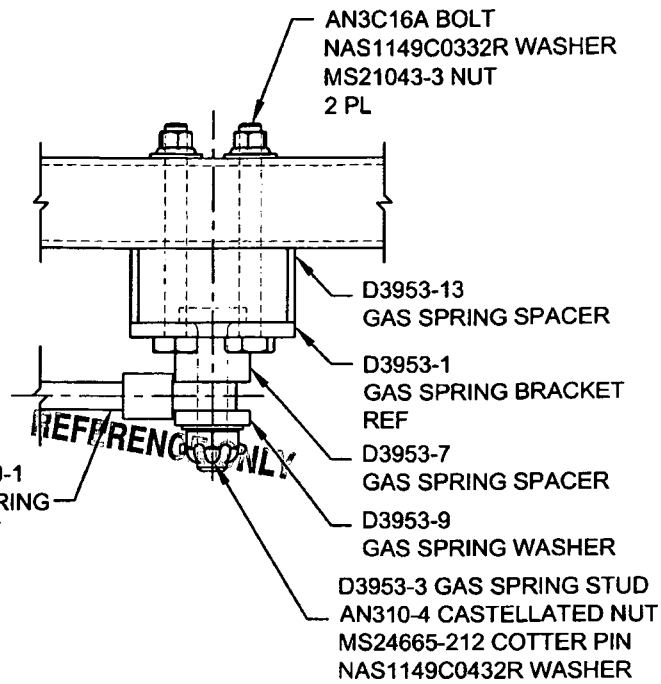

VIEW E-E

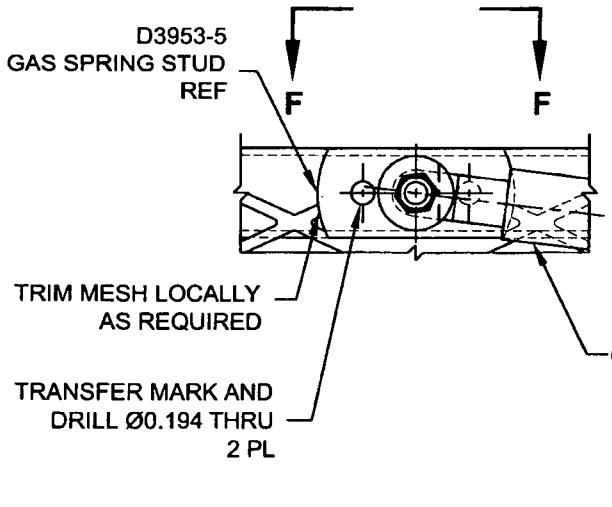

DETAIL B

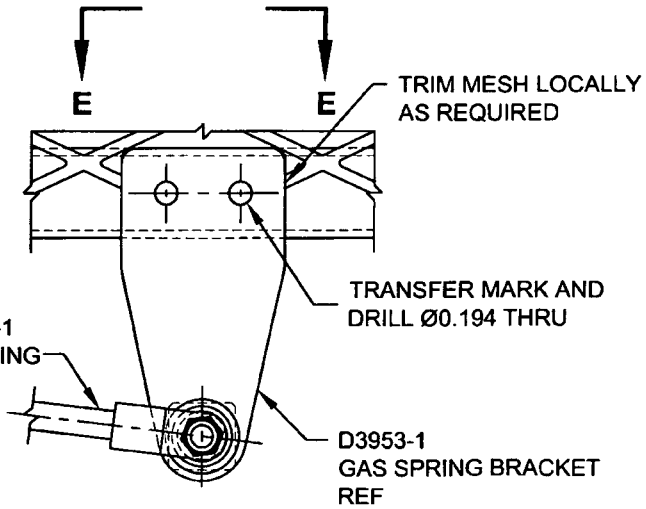

DETAIL A

CANADA
DEPARTMENT OF TRANSPORT
AIRCRAFT CERTIFICATION
BRANCH
DAO # 01-O-01

APPROVED

BY: D. SHEPHERD (DE # 02)

DATE: 09.11.11
CERT. NO.: SH94-14
ISSUE NO.: 4

DESIGN	AJS	**DART AEROSPACE LTD** HAWKESBURY, ONTARIO, CANADA
DRAWN	AJS	
CHECKED		DRAWING NO. REV. C
MFG. APPR.	N/A	DSI 9473 SHEET 7 OF 8
APPROVED		TITLE SCALE
DE APPR.		AUTOMATIC LID OPENER INSTL NTS
DATE	09.11.11	

COPYRIGHT © 2009 BY DART AEROSPACE LTD
THIS DOCUMENT IS PRIVATE AND CONFIDENTIAL AND IS SUPPLIED ON THE EXPRESS CONDITION THAT IT IS NOT TO BE USED FOR ANY PURPOSE OR COPIED OR COMMUNICATED TO ANY OTHER PERSON WITHOUT WRITTEN PERMISSION FROM DART AEROSPACE LTD.

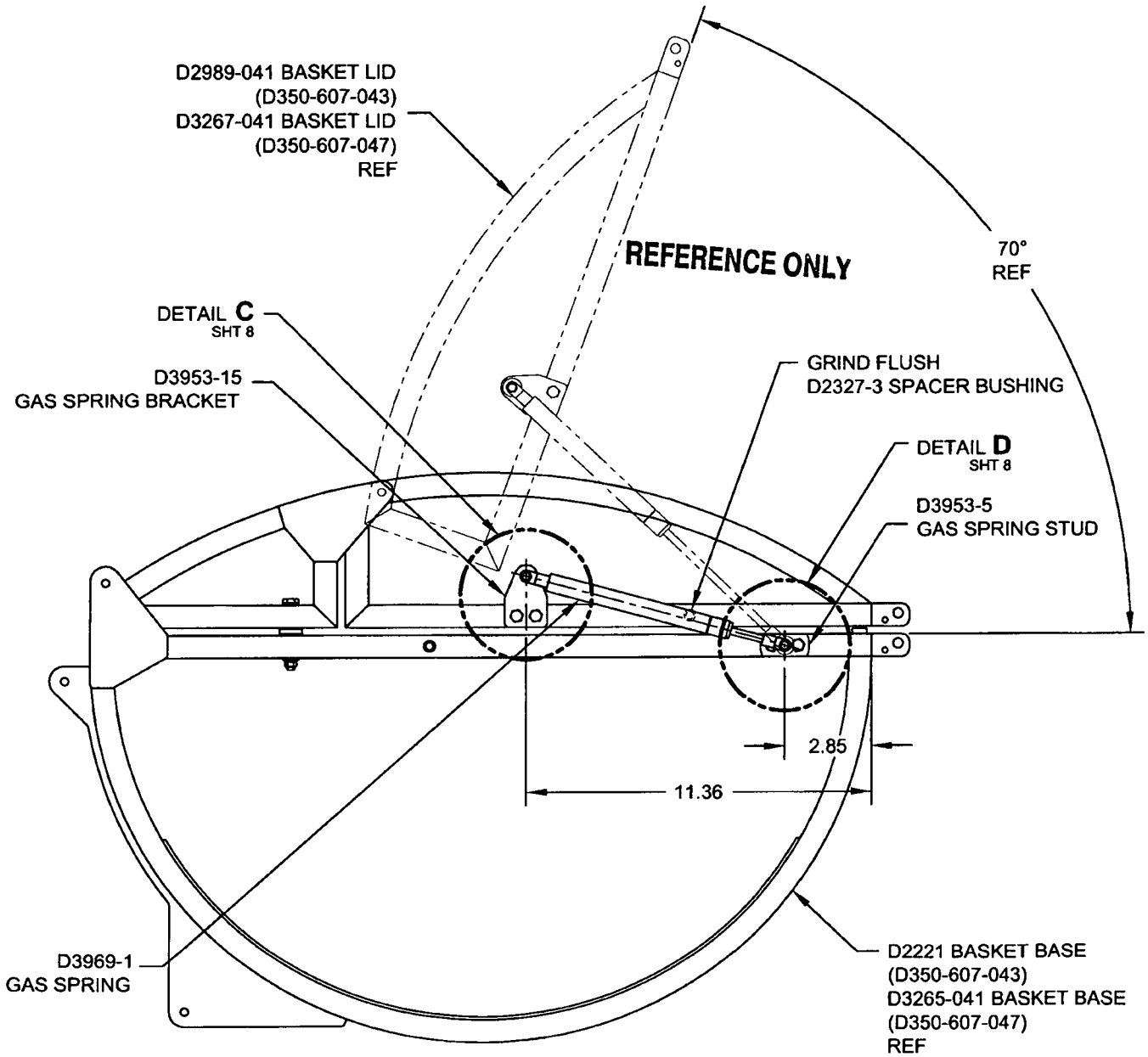

FIGURE 2

D350-607-143 AUTOMATIC LID OPENER INSTALLATION

(1 END ONLY)

CANADA
DEPARTMENT OF TRANSPORT
AIRCRAFT CERTIFICATION
BRANCH
DAO # 01-O-01

APPROVED

BY: _____
D. SHEPHERD (DE # 02)

DATE: 09.11.11
CERT. NO.: SH94-14
ISSUE NO.: 4

DESIGN	AJS	**DART AEROSPACE LTD** HAWKESBURY, ONTARIO, CANADA
DRAWN	AJS	
CHECKED		DRAWING NO. REV. C
MFG. APPR.	N/A	DSI 9473 SHEET 6 OF 8
APPROVED		TITLE SCALE
DE APPR.		AUTOMATIC LID OPENER INSTL NTS
DATE	09.11.11	

COPYRIGHT © 2009 BY DART AEROSPACE LTD
THIS DOCUMENT IS PRIVATE AND CONFIDENTIAL AND IS SUPPLIED ON THE EXPRESS CONDITION THAT IT IS NOT TO BE USED FOR ANY PURPOSE OR COPIED OR COMMUNICATED TO ANY OTHER PERSON WITHOUT WRITTEN PERMISSION FROM DART AEROSPACE LTD.

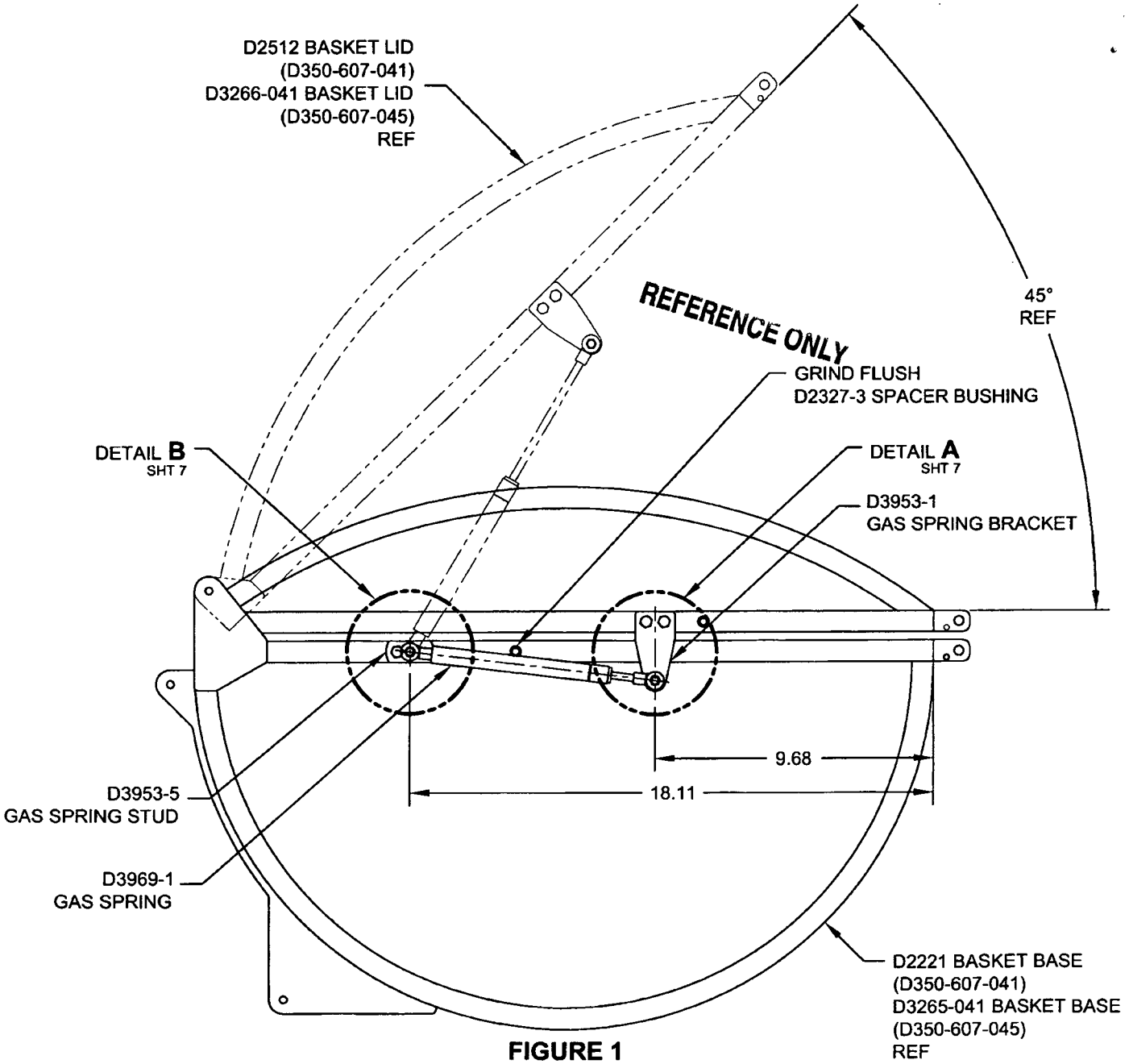

FIGURE 1

D350-607-141 AUTOMATIC LID OPENER INSTALLATION

(BOTH ENDS)

D350-607-145 AUTOMATIC LID OPENER INSTALLATION

(1 END ONLY)

CANADA
DEPARTMENT OF TRANSPORT
AIRCRAFT CERTIFICATION
BRANCH
DAO # 01-O-01

APPROVED

BY: _____
D. SHEPHERD (DE # 02)

DATE: 09.11.11
CERT. NO.: SH94-14
ISSUE NO.: 4

DESIGN	AJS	**DART AEROSPACE LTD** HAWKESBURY, ONTARIO, CANADA
DRAWN	AJS	
CHECKED		DRAWING NO. REV. C
MFG. APPR.	N/A	DSI 9473 SHEET 5 OF 8
APPROVED		TITLE SCALE
DE APPR.		AUTOMATIC LID OPENER INSTL NTS
DATE	09.11.11	

COPYRIGHT © 2009 BY DART AEROSPACE LTD
THIS DOCUMENT IS PRIVATE AND CONFIDENTIAL AND IS SUPPLIED ON THE EXPRESS CONDITION THAT IT IS NOT TO BE USED FOR ANY PURPOSE OR COPIED OR COMMUNICATED TO ANY OTHER PERSON WITHOUT WRITTEN PERMISSION FROM DART AEROSPACE LTD.

FOR D350-607-045 BASKETS REPLACE THE EXISTING D2332-041 PROP ARM ASSEMBLY AS FOLLOWS:

D350-607-145 AUTOMATIC LID OPENER INSTALLATION

NOTE: THIS KIT MAY BE INSTALLED AT EITHER END OF THE BASKET. HOWEVER, THE PROP ARM MUST BE REMOVED IN EITHER CASE AS IT WILL INTERFERE WITH THE FUNCTION OF THE GAS SPRING.

REFERENCE ONLY

1) REMOVE THE D2332-041 PROP ARM.

2) GRIND FLUSH THE D2327-3 SPACER BUSHING ON THE END OF THE BASKET WHERE THE LID OPENER IS BE INSTALLED AS SHOWN IN FIGURE 1 (IT IS PERMISSIBLE TO GRIND ALL 4 SPACERS FLUSH). TOUCH UP PAINT PER ICA-D350-607 REV. 0 SECTION 5.1 ITEM 4.

3) LOCATE THE D3953-1 GAS SPRING BRACKET AS SHOWN IN FIGURE 1. TRIM STEEL MESH LOCALLY AS REQUIRED. TOUCH UP PAINT PER ICA-D350-607 REV. 0 SECTION 5.1 ITEM 4. TRANSFER MARK AND DRILL 2X Ø0.194 HOLES THRU THE BASKET LID SQUARE TUBE STRUCTURE AS SHOWN IN DETAIL A. INSTALL THE D3953-1 GAS SPRING BRACKET & D3953-13 GAS SPRING SPACER USING 2X AN3C16A BOLT, 2X NAS1149C0332R WASHER & 2X MS21043-3 NUT AS SHOWN IN VIEW E-E.

4) LOCATE THE D3953-5 GAS SPRING STUD AS SHOWN IN FIGURE 1. TRIM STEEL MESH LOCALLY AS REQUIRED. TOUCH UP PAINT PER ICA-D350-607 REV. 0 SECTION 5.1 ITEM 4. TRANSFER MARK AND DRILL 2X Ø0.194 HOLES THRU THE BASKET BASE SQUARE TUBE STRUCTURE AS SHOWN IN DETAIL B. FASTEN D3953-5 IAW VIEW F-F USING 2X AN3C11A BOLT, 2X NAS1149C0332R WASHER & 2X MS21043-3 NUT.

5) INSTALL 1X D3953-11 GAS SPRING SPACER ONTO THE D3953-5 STUD AS SHOWN IN VIEW F-F. INSTALL THE LARGE END OF THE D3969-1 GAS SPRING SPRING ONTO THE D3953-5 GAS SPRING STUD AND FASTEN IN PLACE USING 1X D3953-9 GAS SPRING WASHER, 1X NAS1149C0432R WASHER, 1X AN310-4 CASTELATTED NUT & 1X MS24665-212 COTTER PIN AS SHOWN IN VIEW F-F. INSTALL COTTER PIN PER MS33540 OR AC43.13 CHAPTER 7-127.

6) INSERT THE D3953-3 GAS SPRING STUD INTO THE D3953-1 GAS SPRING BRACKET & INSERT THE D3953-7 GAS SPRING SPACER ONTO THE D3953-3 GAS SPRING AS SHOWN IN VIEW E-E. RAISE THE BASKET LID AND INSTALL THE ROD END OF THE D3969-1 GAS SPRING ONTO THE D3953-3 GAS SPRING STUD USING 1X D3953-9 GAS SPRING WASHER, 1X NAS1149C0432R WASHER, 1X AN310-4 CASTELATTED NUT & 1X MS24665-212 COTTER PIN AS SHOWN IN VIEW E-E. INSTALL COTTER PIN PER MS33540 OR AC43.13 CHAPTER 7-127.

NOTE: THE D3953-3 GAS SPRING STUD CAN BE HELD IN PLACE WITH A 9/16 OPEN END SPANNER / WRENCH.

NOTE: WITH THE LID IN THE CLOSED POSITION THE GAS SPRING SHOULD NOT BE FULLY COMPRESSED.

7) TEST THE INSTALLATION. IF INSTALLED PROPERLY THE GAS SPRING SHOULD ASSIST THE BASKET USER IN BOTH OPENING AND CLOSING THE BASKET LID.

CANADA
DEPARTMENT OF TRANSPORT
AIRCRAFT CERTIFICATION
BRANCH
DAO # 01-O-01

APPROVED

BY: _____
D. SHEPHERD (DE # 02)

DATE: 09.11.11
CERT. NO.: SH94-14
ISSUE NO.: 4

DESIGN	AJS	**DART AEROSPACE LTD** HAWKESBURY, ONTARIO, CANADA
DRAWN	AJS	
CHECKED		DRAWING NO. DSI 9473 — REV. C — SHEET 4 OF 8
MFG. APPR.	N/A	
APPROVED		TITLE: AUTOMATIC LID OPENER INSTL — SCALE: NTS
DE APPR.		
DATE	09.11.11	

COPYRIGHT © 2009 BY DART AEROSPACE LTD
THIS DOCUMENT IS PRIVATE AND CONFIDENTIAL AND IS SUPPLIED ON THE EXPRESS CONDITION THAT IT IS NOT TO BE USED FOR ANY PURPOSE OR COPIED OR COMMUNICATED TO ANY OTHER PERSON WITHOUT WRITTEN PERMISSION FROM DART AEROSPACE LTD.

FOR D350-607-043/-047 BASKETS REPLACE THE EXISTING D2332-041 PROP ARM ASSEMBLY AS FOLLOWS:

D350-607-143 AUTOMATIC LID OPENER INSTALLATION

NOTE: THIS KIT MAY BE INSTALLED AT EITHER END OF THE BASKET HOWEVER THE PROP ARM MUST BE REMOVED IN EITHER CASE AS IT WILL INTERFERE WITH THE FUNCTION OF THE GAS SPRING.

1) REMOVE THE D2332-041 PROP ARM.

2) GRIND FLUSH THE D2327-3 SPACER BUSHING ON THE END OF THE BASKET WHERE THE LID OPENER IS BE INSTALLED AS SHOWN IN FIGURE 2 (IT IS PERMISSIBLE TO GRIND ALL 4 SPACERS FLUSH). TOUCH UP PAINT PER ICA-D350-607 REV. 0 SECTION 5.1 ITEM 4.

3) LOCATE THE D3953-15 GAS SPRING BRACKET AS SHOWN IN FIGURE 2. TRIM STEEL MESH LOCALLY AS REQUIRED. TOUCH UP PAINT PER ICA-D350-607 REV. 0 SECTION 5.1 ITEM 4. TRANSFER MARK AND DRILL 2X Ø0.194 HOLES THRU THE BASKET LID SQUARE TUBE STRUCTURE AS SHOWN IN DETAIL C. INSTALL THE D3953-15 GAS SPRING BRACKET & D3953-17 GAS SPRING SPACER USING 2X AN3C15A BOLT, 2X NAS1149C0332R WASHER & 2X MS21043-3 NUT AS SHOWN IN VIEW G-G.

4) LOCATE THE D3953-5 GAS SPRING STUD AS SHOWN IN FIGURE 2. TRIM STEEL MESH LOCALLY AS REQUIRED. TOUCH UP PAINT PER ICA-D350-607 REV. 0 SECTION 5.1 ITEM 4. TRANSFER MARK AND DRILL 2X Ø0.194 HOLES THRU THE BASKET BASE SQUARE TUBE STRUCTURE AS SHOWN IN DETAIL D. INSTALL 2X AN3C11A BOLT, 2X NAS1149C0332R WASHER & 2X MS21043-3 NUT AS SHOWN IN VIEW H-H. INSTALL THE ROD END OF THE D3969-1 GAS SPRING ONTO THE D3953-3 GAS SPRING STUD USING 1X D3953-9 GAS SPRING WASHER, 1X NAS1149C0432R WASHER, 1X AN310-4 CASTELATTED NUT & 1X MS24665-212 COTTER PIN AS SHOWN IN VIEW H-H. INSTALL COTTER PIN PER MS33540 OR AC43.13 CHAPTER 7-127.

5) INSERT THE D3953-3 GAS SPRING STUD INTO THE D3953-15 GAS SPRING BRACKET & INSERT THE D3953-7 GAS SPRING SPACER ONTO THE D3953-3 GAS SPRING STUD AS SHOWN IN VIEW G-G. RAISE THE BASKET LID AND INSTALL THE D3969-1 GAS SPRING ONTO THE D3953-3 GAS SPRING STUD AND FASTEN IN PLACE USING 1X D3953-9 GAS SPRING WASHER, 1X NAS1149C0432R WASHER,1X AN310-4 CASTELATTED NUT & 1X MS24665-212 COTTER PIN AS SHOWN IN VIEW G-G. INSTALL COTTER PIN PER MS33540 OR AC43.13 CHAPTER 7-127.

   NOTE: THE D3953-3 GAS SPRING STUD CAN BE HELD IN PLACE WITH A 9/16 OPEN END SPANNER / WRENCH.

NOTE: WITH THE LID IN THE CLOSED POSITION THE GAS SPRING SHOULD NOT BE FULLY COMPRESSED.

6) TEST THE INSTALLATION. IF INSTALLED PROPERLY THE GAS SPRING SHOULD ASSIST THE BASKET USER IN BOTH OPENING AND CLOSING THE BASKET LID.

CANADA
DEPARTMENT OF TRANSPORT
AIRCRAFT CERTIFICATION
BRANCH
DAO # 01-O-01

APPROVED

BY: _____
D. SHEPHERD (DE # 02)

DATE: 09.11.11
CERT. NO.: SH94-14
ISSUE NO.: 4

DESIGN	AJS	**DART AEROSPACE LTD** HAWKESBURY, ONTARIO, CANADA
DRAWN	AJS	
CHECKED		DRAWING NO. REV. C
MFG. APPR.	N/A	DSI 9473 SHEET 3 OF 8
APPROVED		TITLE SCALE
DE APPR.		AUTOMATIC LID OPENER INSTL NTS
DATE	09.11.11	

COPYRIGHT © 2009 BY DART AEROSPACE LTD
THIS DOCUMENT IS PRIVATE AND CONFIDENTIAL AND IS SUPPLIED ON THE EXPRESS CONDITION THAT IT IS NOT TO BE USED FOR ANY PURPOSE OR COPIED OR COMMUNICATED TO ANY OTHER PERSON WITHOUT WRITTEN PERMISSION FROM DART AEROSPACE LTD.

FOR D350-607-041 BASKETS, REPLACE THE EXISTING D2332-041 PROP ARM ASSEMBLY AS FOLLOWS:

D350-607-141 AUTOMATIC LID OPENER INSTALLATION

NOTE: ONCE THIS MODIFICATION IS COMPLETE YOU WILL NOT BE ABLE TO RE-INSTALL THE D2332-041 PROP ARM.

REFERENCE ONLY

1) REMOVE THE D2332-041 PROP ARM.

2) GRIND FLUSH THE D2327-3 SPACER BUSHING ON BOTH ENDS OF THE BASKET AS SHOWN IN FIGURE 1 (IT IS PERMISSIBLE TO GRIND ALL 4 SPACERS FLUSH). TOUCH UP PAINT PER ICA-D350-607 REV. 0 SECTION 5.1 ITEM 4.

3) LOCATE THE D3953-1 GAS SPRING BRACKET AS SHOWN IN FIGURE 1. TRIM STEEL MESH LOCALLY AS REQUIRED. TOUCH UP PAINT PER ICA-D350-607 REV. 0 SECTION 5.1 ITEM 4. TRANSFER MARK AND DRILL 2X Ø0.194 HOLES THRU THE BASKET LID SQUARE TUBE STRUCTURE AS SHOWN IN DETAIL A. INSTALL THE D3953-1 GAS SPRING BRACKET & D3953-13 GAS SPRING SPACER USING 2X AN3C16A BOLT, 2X NAS1149C0332R WASHER & 2X MS21043-3 NUT AS SHOWN IN VIEW E-E.

4) LOCATE THE D3953-5 GAS SPRING STUD AS SHOWN IN FIGURE 1. TRIM STEEL MESH LOCALLY AS REQUIRED. TOUCH UP PAINT PER ICA-D350-607 REV. 0 SECTION 5.1 ITEM 4. TRANSFER MARK AND DRILL 2X Ø0.194 HOLES THRU THE BASKET BASE SQUARE TUBE STRUCTURE AS SHOWN IN DETAIL B. FASTEN D3953-5 IAW VIEW F-F USING 2X AN3C11A BOLT, 2X NAS1149C0332R WASHER & 2X MS21043-3 NUT.

5) INSTALL 1X D3953-11 GAS SPRING SPACER ONTO THE D3953-5 STUD AS SHOWN IN VIEW F-F. INSTALL THE LARGE END OF THE D3969-1 GAS SPRING SPRING ONTO THE D3953-5 GAS SPRING STUD AND FASTEN IN PLACE USING 1X D3953-9 GAS SPRING WASHER, 1X NAS1149C0432R WASHER, 1X AN310-4 CASTELATTED NUT & 1X MS24665-212 COTTER PIN AS SHOWN IN VIEW F-F. INSTALL COTTER PIN PER MS33540 OR AC43.13 CHAPTER 7-127.

6) INSERT THE D3953-3 GAS SPRING STUD INTO THE D3953-1 GAS SPRING BRACKET & INSERT THE D3953-7 GAS SPRING SPACER ONTO THE D3953-3 GAS SPRING AS SHOWN IN VEW E-E. RAISE THE BASKET LID AND INSTALL THE ROD END OF THE D3969-1 GAS SPRING ONTO THE D3953-3 GAS SPRING STUD USING 1X D3953-9 GAS SPRING WASHER, 1X NAS1149C0432R WASHER, 1X AN310-4 CASTELATTED NUT & 1X MS24665-212 COTTER PIN AS SHOWN IN VIEW E-E. INSTALL COTTER PIN PER MS33540 OR AC43.13 CHAPTER 7-127.

NOTE: THE D3953-3 GAS SPRING STUD CAN BE HELD IN PLACE WITH A 9/16 OPEN END SPANNER / WRENCH.

NOTE: WITH THE LID IN THE CLOSED POSITION THE GAS SPRING SHOULD NOT BE FULLY COMPRESSED.

7) REPEAT STEPS 2 THROUGH 6 AT THE OTHER END OF THE BASKET.

8) TEST THE INSTALLATION. IF INSTALLED PROPERLY THE GAS SPRINGS SHOULD ASSIST THE BASKET USER IN BOTH OPENING AND CLOSING THE BASKET LID.

CANADA
DEPARTMENT OF TRANSPORT
AIRCRAFT CERTIFICATION
BRANCH
DAO # 01-O-01

APPROVED

BY: _____
D. SHEPHERD (DE # 02)

DATE: 09.11.11
CERT. NO.: SH94-14
ISSUE NO.: 4

DESIGN	AJS	**DART AEROSPACE LTD** HAWKESBURY, ONTARIO, CANADA
DRAWN	AJS	
CHECKED		DRAWING NO. REV. C
MFG. APPR.	N/A	DSI 9473 SHEET 2 OF 8
APPROVED		TITLE SCALE
DE APPR.		AUTOMATIC LID OPENER INSTL NTS
DATE	09.11.11	

COPYRIGHT © 2009 BY DART AEROSPACE LTD
THIS DOCUMENT IS PRIVATE AND CONFIDENTIAL AND IS SUPPLIED ON THE EXPRESS CONDITION THAT IT IS NOT TO BE USED FOR ANY PURPOSE OR COPIED OR COMMUNICATED TO ANY OTHER PERSON WITHOUT WRITTEN PERMISSION FROM DART AEROSPACE LTD.

DART SERVICE INSTRUCTION

TO AMEND DRAWING D350-607 REV. F OR SUBSEQUENT APPROVED REVISION

REF CANADIAN STC: SH94-14

FAA STC: SR00213NY

EASA STC: EASA.IM.R.S.01405

THE PURPOSE OF THIS DART SERVICE INSTRUCTION (DSI), IS TO PROVIDE OPERATORS OF AS350 / 355 ROTORCRAFT EQUIPPED WITH DART D350-607-041 *HELI UTILITY BASKETS* WITH AN UPGRADE KIT TO REPLACE THE EXISTING LID PROP ARM WITH 2 GAS SPRINGS.

REFERENCE ONLY

FOR OPERATORS EQUIPPED WITH D350-607-043/-045/-047 *HELI UTILITY BASKETS* THIS DSI WILL PROVIDE AN UPGRADE KIT TO REPLACE THE EXISTING LID PROP ARM WITH 1 GAS SPRING.

ITEM No.	QTY -141	QTY -143	QTY -145	PART NUMBER	DESCRIPTION
1	X			**D350-607-141**	**AUTOMATIC LID OPENER INSTL (FOR USE ON -041 BASKET*)**
2		X		**D350-607-143**	**AUTOMATIC LID OPENER INSTL (FOR USE ON -043/-047 BASKET*)**
3			X	**D350-607-145**	**AUTOMATIC LID OPENER INSTL (FOR USE ON -045 BASKET*)**
4	2		1	D3953-1	GAS SPRING BRACKET
5	2	1	1	D3953-3	GAS SPRING STUD (LID)
6	2	1	1	D3953-5	GAS SPRING STUD (BASE)
7	2	1	1	D3953-7	GAS SPRING SPACER
8	4	2	2	D3953-9	GAS SPRING WASHER
9	2	1	1	D3953-11	GAS SPRING SPACER
10	2		1	D3953-13	GAS SPRING SPACER
11		1		D3953-15	GAS SPRING BRACKET
12		1		D3953-17	GAS SPRING SPACER
13	2	1	1	D3969-1	GAS SPRING
14	4	2	2	AN3C11A	BOLT
15		2		AN3C15A	BOLT
18	4		2	AN3C16A	BOLT
19	4	2	2	AN310-4	CASTELLATED NUT
20	8	4	4	MS21043-3	NUT
21	4	2	2	MS24665-212	COTTER PIN
22	8	4	4	NAS1149C0332R	WASHER (OR AN960C10L)
23	4	2	2	NAS1149C0432R	WASHER (OR AN960C416L)

***NOTE:** FOR CUSTOMERS WISHING TO ORDER NEW BASKETS WITH THE LID OPENER PRE-INSTALLED USE THE FOLLOWING NUMBERS:

D350-607-041 BASKET WITH AUTOMATIC LID OPENER INSTALLED = D350-607-041A
D350-607-043 BASKET WITH AUTOMATIC LID OPENER INSTALLED= D350-607-043A
D350-607-045 BASKET WITH AUTOMATIC LID OPENER INSTALLED = D350-607-045A
D350-607-047 BASKET WITH AUTOMATIC LID OPENER INSTALLED = D350-607-047A

REV.	DESCRIPTION	BY	DATE
C	SHEET 1 PL, -143 INSTL, ITEM 6 QTY WAS 2, ITEM 7 WAS 0.	AJS	09.11.11
B	SHT 1 P/L ITEM 22 WAS NAS1149C0332 ITEM 23 WAS NAS1149C0432H. ALL OTHER SHEETS UPDATED ACCORDINGLY. (REASON: DRAFTING ERROR) INSTALLATIONS RENAMED.	AJS	09.11.06
A	NEW ISSUE	AJS	09.09.15

CANADA
DEPARTMENT OF TRANSPORT
AIRCRAFT CERTIFICATION BRANCH
DAO # 01-O-01

APPROVED

BY: _____
D. SHEPHERD (DE # 02)

DATE: 09.11.11
CERT. NO.: SH94-14
ISSUE NO.: 4

DESIGN	AJS	**DART AEROSPACE LTD** HAWKESBURY, ONTARIO, CANADA
DRAWN	AJS	
CHECKED		DRAWING NO. REV. C
MFG. APPR.	N/A	DSI 9473 SHEET 1 OF 8
APPROVED		TITLE SCALE
DE APPR.		AUTOMATIC LID OPENER INSTL NTS
DATE	09.11.11	

COPYRIGHT © 2009 BY DART AEROSPACE LTD
THIS DOCUMENT IS PRIVATE AND CONFIDENTIAL AND IS SUPPLIED ON THE EXPRESS CONDITION THAT IT IS NOT TO BE USED FOR ANY PURPOSE OR COPIED OR COMMUNICATED TO ANY OTHER PERSON WITHOUT WRITTEN PERMISSION FROM DART AEROSPACE LTD.

Dart Aerospace Ltd

W/O:		WORK ORDER CHANGES					
DATE	STEP	PROCEDURE CHANGE	By	Date	Qty	Approval Chief Eng / Prod Mgr	Approval QC Inspector

Part No: _____ PAR #: _____ Fault Category: _____ NCR: Yes No DQA: _____ Date: _____

Resolution: _____ Disposition: _____ QA: N/C Closed: _____ Date: _____

NCR:		WORK ORDER NON-CONFORMANCE (NCR)						
DATE	STEP	Description of NC Section A	Corrective Action Section B			Verification Section C	Approval Chief Eng	Approval QC Inspector
			Initial Chief Eng	Action Description Chief Eng	Sign & Date			

NOTE: Date & initial all entries

H:\fFORMS\Quality Assurance\approved QA\NCRWO RevE

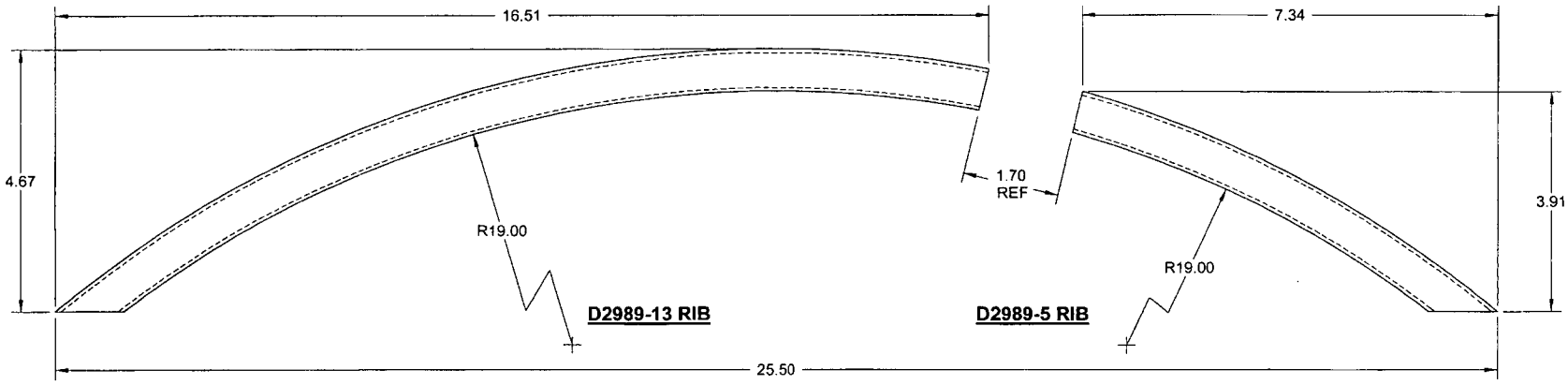

D2989-13 RIB

D2989-5 RIB

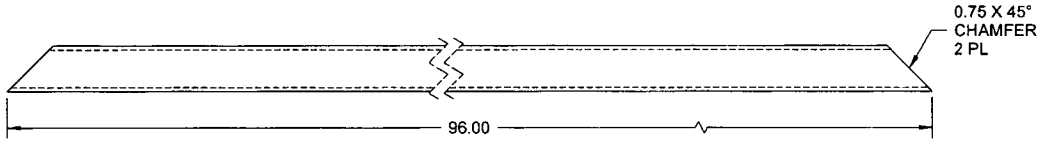

D2989-17 RIB

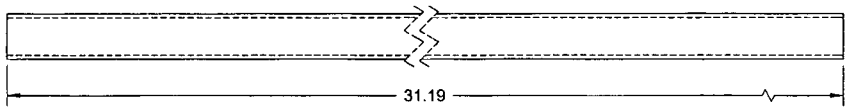

D2989-19 RIB

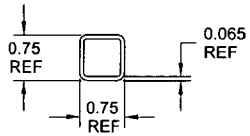

TYPICAL SECTION VIEW

w/o w/908

RELEASED 08/11/18

NOTES:
1) MATERIAL: AISI 304/316 STAINLESS STEEL SQUARE TUBE, 0.75 X 0.75 X 0.065 WALL
REF. DART SPEC. M304TS0.750W0.065
2) FINISH: NONE
3) TOLERANCES: PER DART QSI 018 UNLESS OTHERWISE NOTED
4) UNITS: INCHES UNLESS OTHERWISE NOTED
5) BREAK SHARP EDGES: 0.005 TO 0.010 MAX
6) IDENTIFICATION: N/A
8) WEIGHT: D2989-5 = 0.37 lbs; D2989-13 = 0.81 lbs; D2989-17 = 4.57 lbs; D2989-19 = 1.50 lbs

DESIGN	DS	**DART AEROSPACE LTD** HAWKESBURY, ONTARIO, CANADA
DRAWN		
CHECKED		DRAWING NO. D2989 — REV. D — SHEET 5 OF 5
MFG. APPR.		
APPROVED		TITLE: BASKET LID ASSEMBLY — SCALE: NTS
DE APPR.		
DATE	08.09.24	

COPYRIGHT © 2000 BY DART AEROSPACE LTD
THIS DOCUMENT IS PRIVATE AND CONFIDENTIAL AND IS SUPPLIED ON THE EXPRESS CONDITION THAT IT IS NOT TO BE USED FOR ANY PURPOSE OR COPIED OR COMMUNICATED TO ANY OTHER PERSON WITHOUT WRITTEN PERMISSION FROM DART AEROSPACE LTD

Dart Aerospace Ltd

W/O:		WORK ORDER CHANGES					
DATE	STEP	PROCEDURE CHANGE	By	Date	Qty	Approval Chief Eng / Prod Mgr	Approval QC Inspector

Part No: _____ **PAR #:** _____ **Fault Category:** _____ **NCR:** Yes No **DQA:** _____ **Date:** _____

Resolution: _____ **Disposition:** _____ **QA: N/C Closed:** _____ **Date:** _____

NCR:		WORK ORDER NON-CONFORMANCE (NCR)						
DATE	STEP	Description of NC Section A	Corrective Action Section B			Verification Section C	Approval Chief Eng	Approval QC Inspector
			Initial Chief Eng	Action Description Chief Eng	Sign & Date			

NOTE: Date & initial all entries

H:\fFORMS\Quality Assurance\approved QA\NCRWO RevE

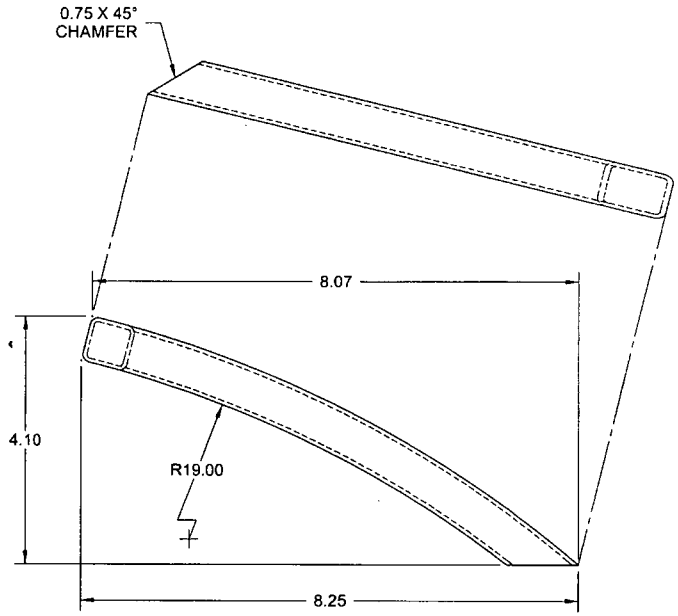

D2989-3 RIB

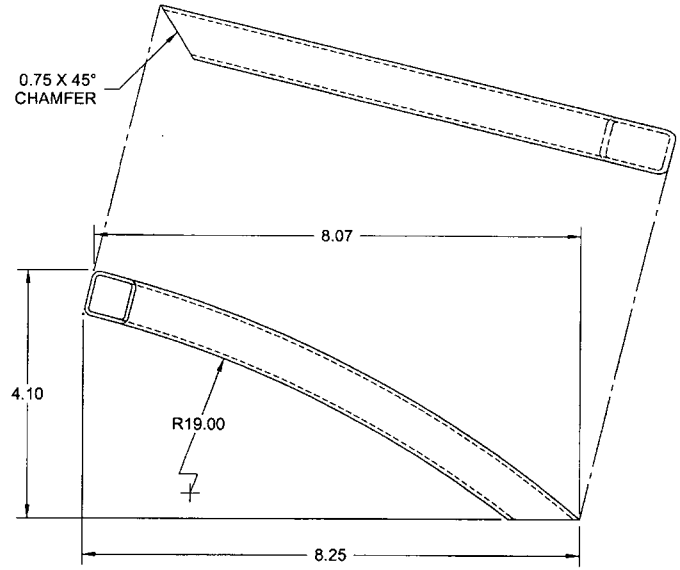

D2989-4 RIB

W/O 4908

RELEASED 08/11/18

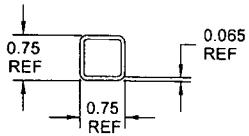

TYPICAL SECTION VIEW

NOTES:
1) MATERIAL: D3166-3 BASKET HOOP
2) FINISH: NONE
3) TOLERANCES: PER DART QSI 018 UNLESS OTHERWISE NOTED
4) UNITS: INCHES UNLESS OTHERWISE NOTED
5) BREAK SHARP EDGES: 0.005 TO 0.010 MAX
6) IDENTIFICATION: N/A
8) WEIGHT: D2989-3/-4 = 0.39 lbs;

DESIGN	DS	**DART AEROSPACE LTD** HAWKESBURY, ONTARIO, CANADA
DRAWN		
CHECKED		DRAWING NO. D2989 — REV. D — SHEET 4 OF 5
MFG. APPR.		
APPROVED		TITLE: BASKET LID ASSEMBLY — SCALE: NTS
DE APPR.		
DATE	08.09.24	

COPYRIGHT © 2000 BY DART AEROSPACE LTD
THIS DOCUMENT IS PRIVATE AND CONFIDENTIAL AND IS SUPPLIED ON THE EXPRESS CONDITION THAT IT IS NOT TO BE USED FOR ANY PURPOSE OR COPIED OR COMMUNICATED TO ANY OTHER PERSON WITHOUT WRITTEN PERMISSION FROM DART AEROSPACE LTD

Dart Aerospace Ltd

W/O:		WORK ORDER CHANGES					
DATE	STEP	PROCEDURE CHANGE	By	Date	Qty	Approval Chief Eng / Prod Mgr	Approval QC Inspector

Part No: _____ PAR #: _____ Fault Category: _____ NCR: Yes No DQA: _____ Date: _____

Resolution: _____ Disposition: _____ QA: N/C Closed: _____ Date: _____

NCR:		WORK ORDER NON-CONFORMANCE (NCR)						
DATE	STEP	Description of NC Section A	Corrective Action Section B			Verification Section C	Approval Chief Eng	Approval QC Inspector
			Initial Chief Eng	Action Description Chief Eng	Sign & Date			

NOTE: Date & initial all entries

H:\fFORMS\Quality Assurance\approved QA\NCRWO RevE

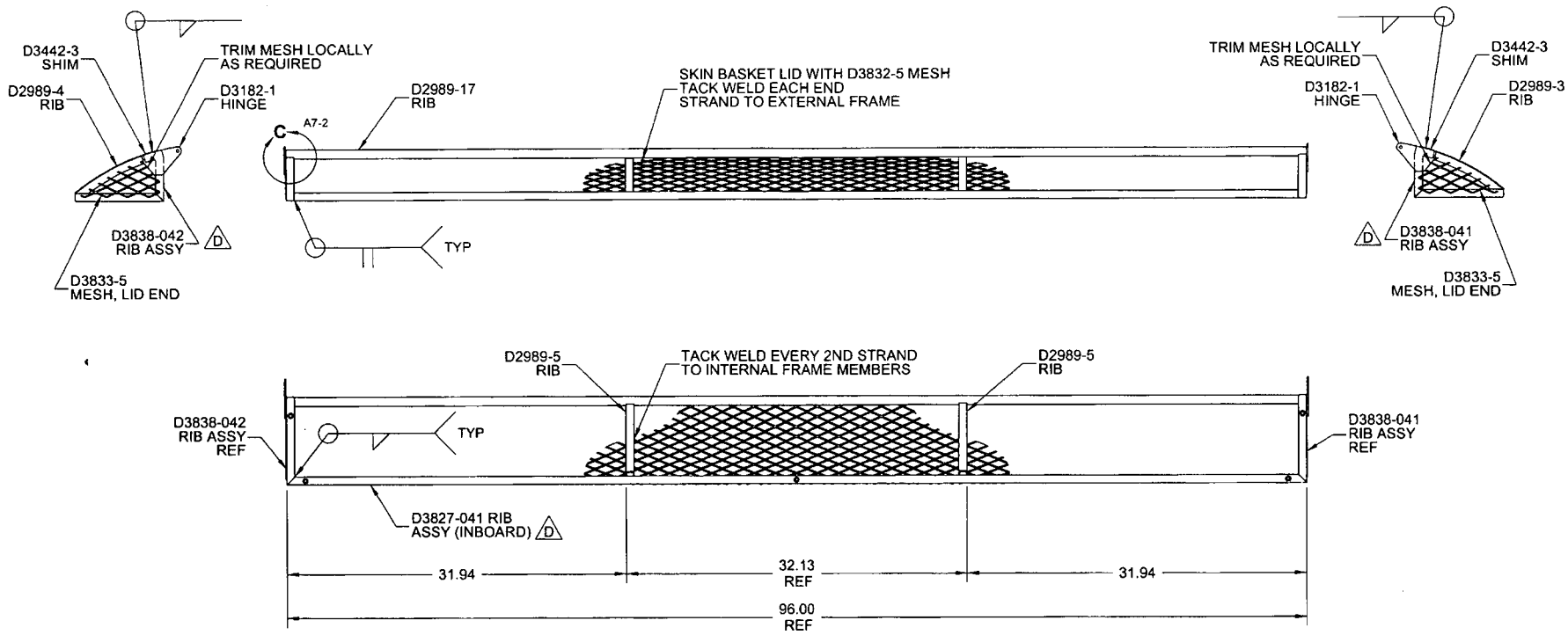

D2989-043 BASKET LID ASSEMBLY
(MESH SHOWN LOCALLY FOR CLARITY)

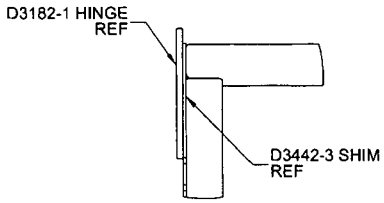

DETAIL C D7-2
TYP, SCALE 4X

w/o w1908

RELEASED
08/11/18

DESIGN	DS	**DART AEROSPACE LTD** HAWKESBURY, ONTARIO, CANADA
DRAWN		
CHECKED		DRAWING NO. D2989 — REV. D — SHEET 3 OF 5
MFG. APPR.		
APPROVED		TITLE: BASKET LID ASSEMBLY — SCALE: NTS
DE APPR.		
DATE	08.09.24	

COPYRIGHT © 2000 BY DART AEROSPACE LTD
THIS DOCUMENT IS PRIVATE AND CONFIDENTIAL AND IS SUPPLIED ON THE EXPRESS CONDITION THAT IT IS NOT TO BE USED FOR ANY PURPOSE OR COPIED OR COMMUNICATED TO ANY OTHER PERSON WITHOUT WRITTEN PERMISSION FROM DART AEROSPACE LTD

Dart Aerospace Ltd

W/O:		WORK ORDER CHANGES					
DATE	STEP	PROCEDURE CHANGE	By	Date	Qty	Approval Chief Eng / Prod Mgr	Approval QC Inspector

Part No: _____ **PAR #:** _____ **Fault Category:** _____ **NCR:** Yes No **DQA:** _____ **Date:** _____

Resolution: _____ **Disposition:** _____ **QA: N/C Closed:** _____ **Date:** _____

NCR:		WORK ORDER NON-CONFORMANCE (NCR)						
DATE	STEP	Description of NC Section A	Corrective Action Section B			Verification Section C	Approval Chief Eng	Approval QC Inspector
			Initial Chief Eng	Action Description Chief Eng	Sign & Date			

NOTE: Date & initial all entries

H:\fFORMS\Quality Assurance\approved QA\NCRWO RevE

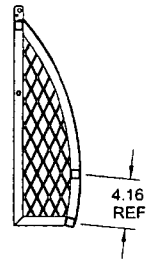

SECTION B-B D7-2

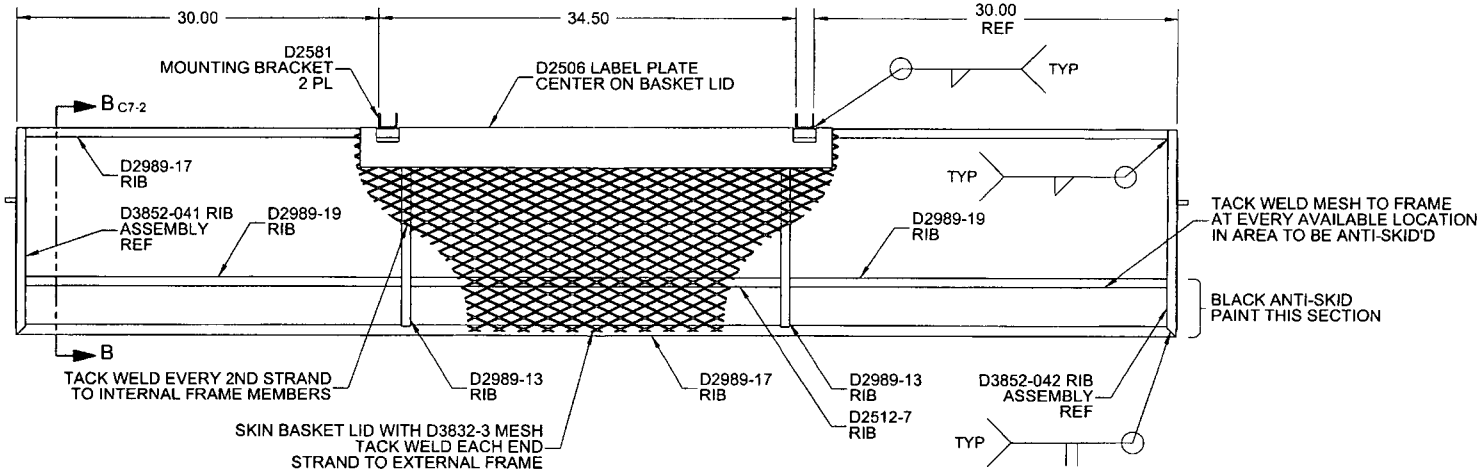

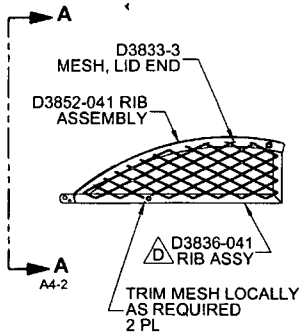

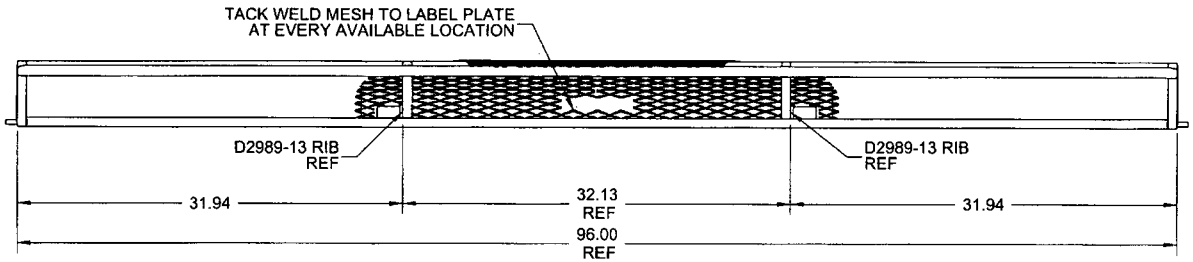

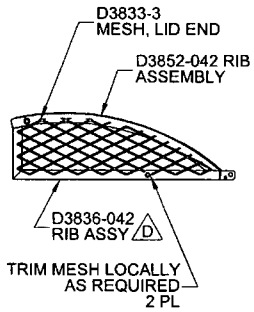

D2989-041 BASKET LID ASSEMBLY
(MESH SHOWN LOCALLY FOR CLARITY)

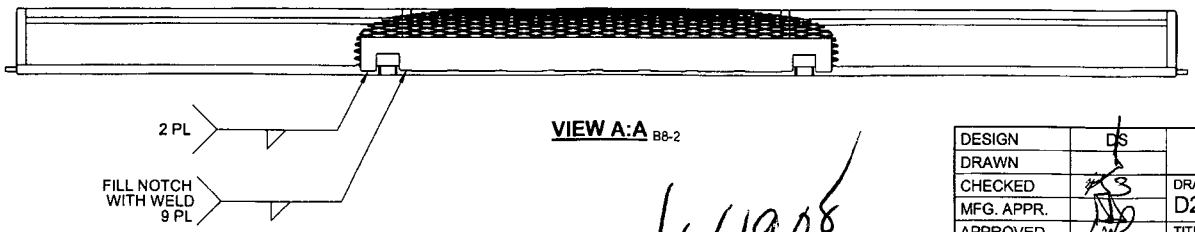

VIEW A:A B8-2

RELEASED 08/11/18

DESIGN	DS	**DART AEROSPACE LTD** HAWKESBURY, ONTARIO, CANADA
DRAWN		
CHECKED		DRAWING NO. D2989 — REV. D — SHEET 2 OF 5
MFG. APPR.		
APPROVED		TITLE: BASKET LID ASSEMBLY — SCALE: NTS
DE APPR.		
DATE	08.09.24	

COPYRIGHT © 2000 BY DART AEROSPACE LTD
THIS DOCUMENT IS PRIVATE AND CONFIDENTIAL AND IS SUPPLIED ON THE EXPRESS CONDITION THAT IT IS NOT TO BE USED FOR ANY PURPOSE OR COPIED OR COMMUNICATED TO ANY OTHER PERSON WITHOUT WRITTEN PERMISSION FROM DART AEROSPACE LTD

Dart Aerospace Ltd

W/O:		WORK ORDER CHANGES					
DATE	STEP	PROCEDURE CHANGE	By	Date	Qty	Approval Chief Eng / Prod Mgr	Approval QC Inspector

Part No: _____ PAR #: _____ Fault Category: _____ NCR: Yes No DQA: _____ Date: _____

Resolution: _____ Disposition: _____ QA: N/C Closed: _____ Date: _____

NCR:		WORK ORDER NON-CONFORMANCE (NCR)						
DATE	STEP	Description of NC Section A	Corrective Action Section B			Verification Section C	Approval Chief Eng	Approval QC Inspector
			Initial Chief Eng	Action Description Chief Eng	Sign & Date			

NOTE: Date & initial all entries

H:\fFORMS\Quality Assurance\approved QA\NCRWO RevE

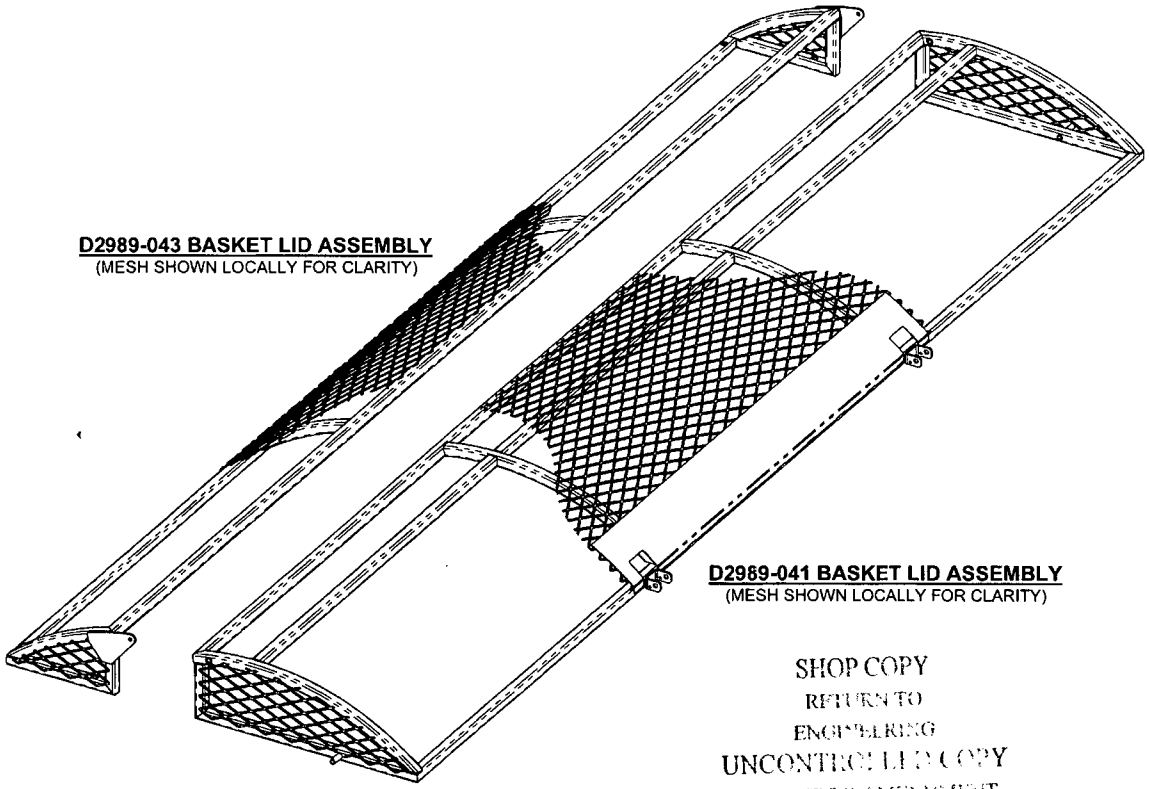

ITEM	QTY -041	QTY -043	P/N	DESCRIPTION
1	X		D2989-041	BASKET LID ASSEMBLY
2		X	D2989-043	BASKET LID ASSEMBLY
3	1		D2506	LABEL PLATE
4	1		D2512-7	RIB
5	2		D2581	MOUNTING BRACKET
6		1	D2989-3	RIB
7		1	D2989-4	RIB
8		2	D2989-5	RIB
9	2		D2989-13	RIB
10	2	1	D2989-17	RIB
11	2		D2989-19	RIB
12		2	D3182-1	HINGE
13		2	D3442-3	SHIM
14		1	D3827-041	RIB ASSY (INBOARD)
15	1		D3832-3	MESH, BASKET LID
16		1	D3832-5	MESH, BASKET LID
17	2		D3833-3	MESH, LID END
18		2	D3833-5	MESH, LID END
19	1		D3836-041	RIB ASSY (BASKET LID, LH)
20	1		D3836-042	RIB ASSY (BASKET LID, RH)
21		1	D3838-041	RIB ASSY (BASKET LID, LH)
22		1	D3838-042	RIB ASSY (BASKET LID, RH)
23	1		D3852-041	RIB ASSEMBLY
24	1		D3852-042	RIB ASSEMBLY

SHOP COPY
RETURN TO
ENGINEERING
UNCONTROLLED COPY
SUBJECT TO AMENDMENT
WITHOUT NOTICE
WORK ORDER
NO. 41908
BS 10-9-09

RELEASED
08/11/18 MB

REV.	DESCRIPTION	BY	DATE
D	REVISED -041/-043 PARTS LISTS AND ADDED "ITEM" COLUMN TO PARTS LIST (ZN D3-1); D3836-041 REPLACES D2989-9/-15; D3836-042 REPLACES D2989-10/-15; D3838-041 REPLACES D2989-1/-7; D3838-042 REPLACES D2989-2/-7; D3852-041 REPLACES D2989-11; D3852-042 REPLACES D2989-2; REMOVED D2327-3 (NOW INSTALLED ON D3836 DWG), D2989-9/-10 (NOW ON D3836 DWG), D2989-1/-2/-7/-15 (NOW ON D3838 DWG) AND D2989-11/-12 (NOW ON D3852 DWG). REASON: TO SATISFY "LEAN MANUFACTURING" PROGRAM	MB	08.09.24
C	FRAME MATERIAL WAS 0.060 WALL; MESH MATERIAL UPDATED; DRAWING TRANSFERED TO "B" FORMAT AND CURRENT DRAFTING STANDARD	AJS	08.06.20
B	ADD SHIM UNDER HINGES, UPDATE LID DIMENSIONS	PH	05.06.07
A	NEW ISSUE	DS	00.10.27

DESIGN	DS	DART AEROSPACE LTD HAWKESBURY, ONTARIO, CANADA
DRAWN		
CHECKED	AJS	DRAWING NO. D2989 — REV. D — SHEET 1 OF 5
MFG. APPR.		
APPROVED		TITLE: BASKET LID ASSEMBLY — SCALE: NTS
DE APPR.		
DATE	08.09.24	

COPYRIGHT © 2000 BY DART AEROSPACE LTD
THIS DOCUMENT IS PRIVATE AND CONFIDENTIAL AND IS SUPPLIED ON THE EXPRESS CONDITION THAT IT IS NOT TO BE USED FOR ANY PURPOSE OR COPIED OR COMMUNICATED TO ANY OTHER PERSON WITHOUT WRITTEN PERMISSION FROM DART AEROSPACE LTD

NOTES:
1) MATERIAL: N/A
2) FINISH: POWDER COAT WHITE (4.3.5.2) PER DART QSI 005 4.3
   BLACK ANTI-SKID PAINT AS INDICATED PER DART QSI 005 4.4
   SPRAY PAINT INSIDE SURFACE BLACK PRIOR TO APPLYING ANTI-SKID
3) TOLERANCES: PER DART QSI 018 UNLESS OTHERWISE NOTED
4) UNITS: INCHES UNLESS OTHERWISE NOTED
5) BREAK SHARP EDGES: 0.005 TO 0.010 MAX
6) IDENTIFICATION: N/A
7) WEIGHT: D2989-041 = 26.50 lbs; D2989-043 = 15.50 lbs
8) WELD PER DART QSI 004

Dart Aerospace Ltd

W/O:		WORK ORDER CHANGES					
DATE	STEP	PROCEDURE CHANGE	By	Date	Qty	Approval Chief Eng / Prod Mgr	Approval QC Inspector

Part No: _____ **PAR #:** _____ **Fault Category:** _____ **NCR:** Yes No **DQA:** _____ **Date:** _____

Resolution: _____ **Disposition:** _____ **QA: N/C Closed:** _____ **Date:** _____

NCR:		WORK ORDER NON-CONFORMANCE (NCR)						
DATE	STEP	Description of NC Section A	Corrective Action Section B			Verification Section C	Approval Chief Eng	Approval QC Inspector
			Initial Chief Eng	Action Description Chief Eng	Sign & Date			

NOTE: Date & initial all entries

H:\fFORMS\Quality Assurance\approved QA\NCRWO RevE

Picklist Print

Thursday, September 09, 2010 1:14:47 PM

Work Order ID: 61908

Parent Item: D2989-041

Parent Item Name: Basket Lid Assembly

Start Date: 9/9/2010 **Required Date:** 9/17/2010

Start Qty: 1.00 **Required Qty:** 1.00

D3852-042 Rib Assembly	Manufactured	No	100	Each	0.0000	1	1	B61434 10·10·14

Dart Aerospace Ltd

W/O:		WORK ORDER CHANGES					
DATE	STEP	PROCEDURE CHANGE	By	Date	Qty	Approval Chief Eng / Prod Mgr	Approval QC Inspector

Part No: _____ PAR #: _____ Fault Category: _____ NCR: Yes No DQA: _____ Date: _____

Resolution: _____ Disposition: _____ QA: N/C Closed: _____ Date: _____

NCR:		WORK ORDER NON-CONFORMANCE (NCR)						
DATE	STEP	Description of NC Section A	Corrective Action Section B			Verification Section C	Approval Chief Eng	Approval QC Inspector
			Initial Chief Eng	Action Description Chief Eng	Sign & Date			

NOTE: Date & initial all entries

H:\fFORMS\Quality Assurance\approved QA\NCRWO RevE

Picklist Print

Thursday, September 09, 2010 1:14:47 PM

Work Order ID: 61908

Parent Item: D2989-041

Parent Item Name: Basket Lid Assembly

Start Date: 9/9/2010 **Required Date:** 9/17/2010

Start Qty: 1.00 **Required Qty:** 1.00

D2989-13 Rib	Manufactured	No		100	Each	0.0000	2	2	B61425 → 2 lpl 10.10.14
D2989-19 Rib	Manufactured	No		100	Each	0.0000	2	2	B61427 → 2 lpl 10.10.14
D3832-3 Mesh (Lid)	Manufactured	No		100	Each	1.0000	1	1	lpl 10.10.14
			Location		**Loc Qty**	**Loc Code**			B61284 → 1
			WA		1				
				60582	1				
D3833-3 Mesh (Lid End)	Manufactured	No		100	Each	3.0000	2	2	lpl 10-10-14
			Location		**Loc Qty**	**Loc Code**			B61315 → 2
			WA		3				
				46308	1				
				60672	2				
D3836-041 Rib Assembly (Basket Lid, LH)	Manufactured	No		100	Each	0.0000	1	1	B61429 lpl 10-10-14
D3836-042 Rib Assembly (Basket Lid, RH)	Manufactured	No		100	Each	0.0000	1	1	B61431 lpl 10-10-14
D3852-041 Rib Assembly	Manufactured	No		100	Each	0.0000	1	1	B61433 lpl 10-10-14

Dart Aerospace Ltd

W/O:		WORK ORDER CHANGES					
DATE	STEP	PROCEDURE CHANGE	By	Date	Qty	Approval Chief Eng / Prod Mgr	Approval QC Inspector

Part No: _____ **PAR #:** _____ **Fault Category:** _____ **NCR:** Yes No **DQA:** _____ **Date:** _____

Resolution: _____ **Disposition:** _____ **QA: N/C Closed:** _____ **Date:** _____

NCR:		WORK ORDER NON-CONFORMANCE (NCR)						
DATE	STEP	Description of NC Section A	Corrective Action Section B			Verification Section C	Approval Chief Eng	Approval QC Inspector
			Initial Chief Eng	Action Description Chief Eng	Sign & Date			

NOTE: Date & initial all entries

H:\fFORMS\Quality Assurance\approved QA\NCRWO RevE

Picklist Print

Thursday, September 09, 2010 1:14:47 PM

Work Order ID: 61908

Parent Item: D2989-041

Parent Item Name: Basket Lid Assembly

Start Date: 9/9/2010 **Required Date:** 9/17/2010

Start Qty: 1.00 **Required Qty:** 1.00

Comments:
IPP Rev:I Removed D2989-043 05-11-03 JLM
IPP Rev:J 08-08-29 revC as per dwg DD verified by:EC
IPP Rev:K 08-09-24 plug hole prior to powder coating DD verified by:EC
IPP Rev:L 08-12-02 revD as per dwg DD verified by:

Component Item ID/ Item Name	Replacement Item ID	Mfg/ Purch	Bin Item	Primary Location	Last Location	Route Seq ID	Unit of Measure	Qty on Hand	Qty per Kit	Total Qty	Qty Issued	Date Issued	Status
D2221-1 Rib		Manufactured	No			100	Each	6.0000	2	2			
				Location			**Loc Qty**		**Loc Code**				
				WA			6						
					61091		6						
D2506 Label Plate		Manufactured	No			100	Each	3.0000	1	1			
				Location			**Loc Qty**		**Loc Code**				
				WA			3						
					61174		3						
D2512-7 Rib		Manufactured	No			100	Each	4.0000	1	1			
				Location			**Loc Qty**		**Loc Code**				
				WA			4						
					60669		4						
D2581 Mounting Bracket		Manufactured	No			100	Each	41.0000	2				
				Location			**Loc Qty**		**Loc Code**				
				WA			41						
					60198		6						
					60470		35						

Dart Aerospace Ltd

W/O:		WORK ORDER CHANGES					
DATE	STEP	PROCEDURE CHANGE	By	Date	Qty	Approval Chief Eng / Prod Mgr	Approval QC Inspector

Part No: _____ PAR #: _____ Fault Category: _____ NCR: Yes No DQA: _____ Date: _____

Resolution: _____ Disposition: _____ QA: N/C Closed: _____ Date: _____

NCR:		WORK ORDER NON-CONFORMANCE (NCR)						
DATE	STEP	Description of NC Section A	Corrective Action Section B			Verification Section C	Approval Chief Eng	Approval QC Inspector
			Initial Chief Eng	Action Description Chief Eng	Sign & Date			

NOTE: Date & initial all entries

H:\fFORMS\Quality Assurance\approved QA\NCRWO RevE

Work Order ID 61908

Thursday, September 09, 2010 1:14:43 PM

Item ID: D2989-041 **Accept** **Setup Start**

Revision ID: **Stop**

Item Name: Basket Lid Assembly

Start Date: 9/9/2010 **Start Qty:** 1.00 **Cust Item ID:**

Required Date: 9/17/2010 **Req'd Qty:** 1.00 **Customer:**

Reference:

Run Start

Approvals: **Process Plan:** _____ **Date:** _____ **Tooling:** _____ **Date:** _____

Stop

QC: _____ **Date:** _____ **SPC (Y/N):** _____ **Date:** _____

Sequence ID/ Work Center ID	Operation Description	Set Up/ Run Hours	Tool ID	Tool #	Plan Code	Accept Qty	Reject Qty	Reject Number	Insp. Stamp
150	QC21- Final Inspection - Work Order Release	0.00						10/10/18	
QC Quality Control	**Memo**	0.00							

JME 10-10-18

Dart Aerospace Ltd

W/O:		WORK ORDER CHANGES					
DATE	STEP	PROCEDURE CHANGE	By	Date	Qty	Approval Chief Eng / Prod Mgr	Approval QC Inspector

Part No: _____ PAR #: _____ Fault Category: _____ NCR: Yes No DQA: _____ Date: _____

Resolution: _____ Disposition: _____ QA: N/C Closed: _____ Date: _____

NCR:		WORK ORDER NON-CONFORMANCE (NCR)						
DATE	STEP	Description of NC Section A	Corrective Action Section B			Verification Section C	Approval Chief Eng	Approval QC Inspector
			Initial Chief Eng	Action Description Chief Eng	Sign & Date			

NOTE: Date & initial all entries

H:\fFORMS\Quality Assurance\approved QA\NCRWO RevE

Work Order ID: 61908

Thursday, September 09, 2010 1:14:43 PM

Item ID: D2989-041 **Accept** **Setup Start**

Revision ID: **Stop**

Item Name: Basket Lid Assembly

Start Date: 9/9/2010 **Start Qty:** 1.00 **Cust Item ID:**

Required Date: 9/17/2010 **Req'd Qty:** 1.00 **Customer:**

Reference:

Run Start **Stop**

Approvals: **Process Plan:** _____ **Date:** _____ **Tooling:** _____ **Date:** _____

QC: _____ **Date:** _____ **SPC (Y/N):** _____ **Date:** _____

Sequence ID/ Work Center ID	Operation Description	Set Up/ Run Hours	Tool ID	Tool #	Plan Code	Accept Qty	Reject Qty	Reject Number	Insp. Stamp
131	Wing Walk as per dwg QSI005 4.4 Batch M1115028	0.00	=> JH	10/10/15		1	Ø		
HandFinish	**Memo**	0.00							
Hand Finishing	Mask lid prior to spray paint black and wing walk as per dwg A/R Spray paint black batch: M1115193								
140	QC3- Inspect Part Finish	0.00							
QC	**Memo**	0.00							
Quality Control									
141	Identify as per dwg & Stock Location: G-A	0.00							
Packaging	**Memo** w/o 62891	0.00							
Packaging									

10/10/18 ⓪

10/10/18 ⓪

Dart Aerospace Ltd

W/O:		WORK ORDER CHANGES					
DATE	STEP	PROCEDURE CHANGE	By	Date	Qty	Approval Chief Eng / Prod Mgr	Approval QC Inspector

Part No: _____ PAR #: _____ Fault Category: _____ NCR: Yes No DQA: _____ Date: _____

Resolution: _____ Disposition: _____ QA: N/C Closed: _____ Date: _____

NCR:		WORK ORDER NON-CONFORMANCE (NCR)						
DATE	STEP	Description of NC Section A	Corrective Action Section B			Verification Section C	Approval Chief Eng	Approval QC Inspector
			Initial Chief Eng	Action Description Chief Eng	Sign & Date			

NOTE: Date & initial all entries

H:\fFORMS\Quality Assurance\approved QA\NCRWO RevE

Work Order ID 61908

Thursday, September 09, 2010 1:14:43 PM

Item ID: D2989-041 **Accept** **Setup Start**

Revision ID: **Stop**

Item Name: Basket Lid Assembly

Start Date: 9/9/2010 **Start Qty:** 1.00 **Cust Item ID:**

Required Date: 9/17/2010 **Req'd Qty:** 1.00 **Customer:**

Reference:

Run Start

Approvals: **Process Plan:** _____ **Date:** _____ **Tooling:** _____ **Date:** _____

Stop

QC: _____ **Date:** _____ **SPC (Y/N):** _____ **Date:** _____

Sequence ID/ Work Center ID	Operation Description	Set Up/ Run Hours	Tool ID	Tool #	Plan Code	Accept Qty	Reject Qty	Reject Number	Insp. Stamp
120	QC6- Inspect dimensions to drawing	0.00 S 10/10/14				40			
QC	**Memo**	0.00							
Quality Control	10.10.14 Pressure Wash per QSI 005 4.3 -> AL 10/10/14					1	0		
130	White Gloss(Ref:4.3.5.2) per QSI005 4.3-Steel	0.00							
Powdercoat	**Memo**	0.00							
Powder Coating	1- Plug holes prior to powder coating AL 10-10-14.								

2-Powder Coat White (Ref. 4.3.5.2) D2989-041 as per QSI 005 4.3 & Dwg D2989 M 115 991

1ST COAT:
START TIME: 3:30
OVEN TEMPERATURE: 400°
FINISH TIME: 4:00

********** 2nd coat if necessary **********

2ND COAT:
START TIME: _____
OVEN TEMPERATURE: _____
FINISH TIME: _____

1.

Dart Aerospace Ltd

W/O:		WORK ORDER CHANGES					
DATE	STEP	PROCEDURE CHANGE	By	Date	Qty	Approval Chief Eng / Prod Mgr	Approval QC Inspector

Part No: _____ PAR #: _____ Fault Category: _____ NCR: Yes No DQA: _____ Date: _____

Resolution: _____ Disposition: _____ QA: N/C Closed: _____ Date: _____

NCR:		WORK ORDER NON-CONFORMANCE (NCR)						
DATE	STEP	Description of NC Section A	Corrective Action Section B			Verification Section C	Approval Chief Eng	Approval QC Inspector
			Initial Chief Eng	Action Description Chief Eng	Sign & Date			

NOTE: Date & initial all entries

H:\fFORMS\Quality Assurance\approved QA\NCRWO RevE

Work Order ID 61908

Thursday, September 09, 2010 1:14:43 PM

Item ID: D2989-041 **Accept** **Setup Start** **Stop**

Revision ID:

Item Name: Basket Lid Assembly

Start Date: 9/9/2010 **Start Qty:** 1.00 **Cust Item ID:**

Required Date: 9/17/2010 **Req'd Qty:** 1.00 **Customer:**

Reference:

Approvals: **Process Plan:** N **Date:** 10-9-09 **Tooling:** _____ **Date:** _____ **Run Start** **Stop**

QC: _____ **Date:** _____ **SPC (Y/N):** _____ **Date:** _____

Sequence ID/ Work Center ID	Operation Description	Set Up/ Run Hours	Tool ID	Tool #	Plan Code	Accept Qty	Reject Qty	Reject Number	Insp. Stamp
Draw Nbr	**Revision Nbr**								
D2989	Rev D								
100		0.00							
Large Fab	Large Fab								
Large Fab	**Memo**	0.00							
Large Fab	1- assemble all ribs and both D2581 in DT9445 jig, weld as per dwg D2989 1-5 ENSURE ONE D3836-041 HAS NO BUSHING and HAS HOLES PER DSI 9473 2- tack weld mesh on basket as per dwg D2989 using DT9445 jig ****cut cutouts with zip cut as per dwg D3832**** 3- remove from jig and weld lable plate as per dwg D2989 A/R ER316 S.S. Rod Batch: 111585								
110	QC9- Inspect visual per QSI004- Fusion Welds	0.00							
QC	**Memo**	0.00							
Quality Control									

Pl 10.10.14

Pl 10.10.14

AD 10.10.14